WH4000SE WI-FI

Operation manual

WH4000SE WI-FI internet radio controlled weather station

Contents

About this manual

Thank you on selecting this Professional WI-FI Weather Station! This device provides accurate weather readings and is Wi-Fi capable to stream live data from your weather station to the internet so that users can run remote monitoring of weather condition.

This manual will guide you step-by-step through setting up your device. Use this manual to become familiar with your professional weather station and save it for future reference.

Glossary of Common Terms

NIST
This is a internet based time service, display time is updated every day to keep time accurate on display.

LCD
“LCD” is an acronym for ”Liquid Crystal Display”. This is a common type of display screen used in televisions, computers, watches, and digital clocks.

BAROMETER & BAROMETRIC PRESSURE
A barometer is a device that measures the pressure of the air pushing on it—this measurement is called the barometric pressure. We don’t actually feel the barometric pressure because the air pressure is pushing equally in every direction.

RELATIVE AIR PRESSURE
Relative air pressure is the same as the barometric pressure. The calculation of relative air pressure is a combination of the absolute air pressure and the altitude.

ABSOLUTE AIR PRESSURE
Absolute air pressure is the actual air pressure on the barometer without regard to altitude.

INCHES OF MERCURY (inHg)
Inches of Mercury is the common unit of measurement for air pressure in the United States.

HECTOPASCALS (hPa)
Hectopascals are the common units of measurement for air pressure in the International System (SI) of measurement. The hectopascal holds the same value

Package Content:

Below please find the package content:

QTY	Item
1	Display Console
1	DC Adapter
1	Outdoor Sensor (Thermo-hygrometer / Rain Gauge / Wind Speed Sensor/ Wind Direction)
2	U-bolt with mounting clamps
1	User manual

QTY	Item
1	CD ROM (PC Software)

Note:
A DC adaptor is included. For switching type adapter, it generates interference and console should be placed at least 0.5m away from display to get best RF reception.

An added feature of the Weather Station is that all the weather data and programs can be viewed and set on a PC Software via Wi-Fi connection.

OVERVIEW

Display console

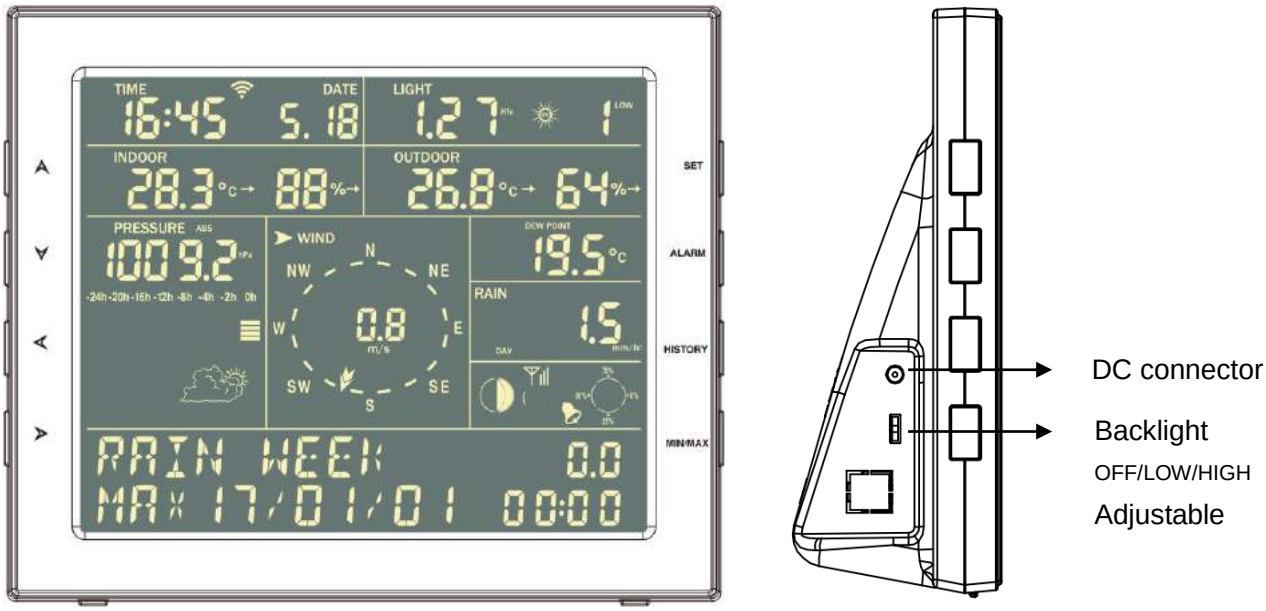

Note: The backlight switch only works when the device is connected to a DC adapter.

Features

- Time and date, Moon phase.
- Indoor temperature and humidity
- Outdoor temperature and humidity
- Wind chill, gust, wind direction.
- Rainfall
- Display rain level and rainfall data in 24 hours, one week, one month, one year, total rain and rainfall event.
- Wind speed in mph, km/h, m/s, knots or Beaufort
- Wind direction with 360 degrees
- Wind chill, dew point and heat index temperature display.
- Barometric, weather forecast.
- MAX, MIN value with time stamp.
- High/ low alarm.
- With message panel showing indication of alarms/Min/Max data, with time stamps

- Light and UV index
- Save the data when batteries are changed
- PC software (Wi-Fi connection)
- Upload the data to 3 weather server: wunderground.com, Weathercloud and WOW

Set up Guide

Note:

Before placing and installing all components of the weather station at their final destination, please set up the display console(receiver) and outdoor sensor(transmitter) with all parts being nearby for testing the correct function.

Power up sequence must be performed in the order shown in this section (insert batteries in the Display Console firstly, Outdoor Sensor secondly).

Attention:

- Do not mix old and new batteries
- Do not use Rechargeable batteries.
- Use Lithium batteries for sensor array when outdoor temperature is lower than 0 degrees Celsius
- Ensure batteries are installed correctly with their polarity +/-

1. Outdoor Sensor Set Up

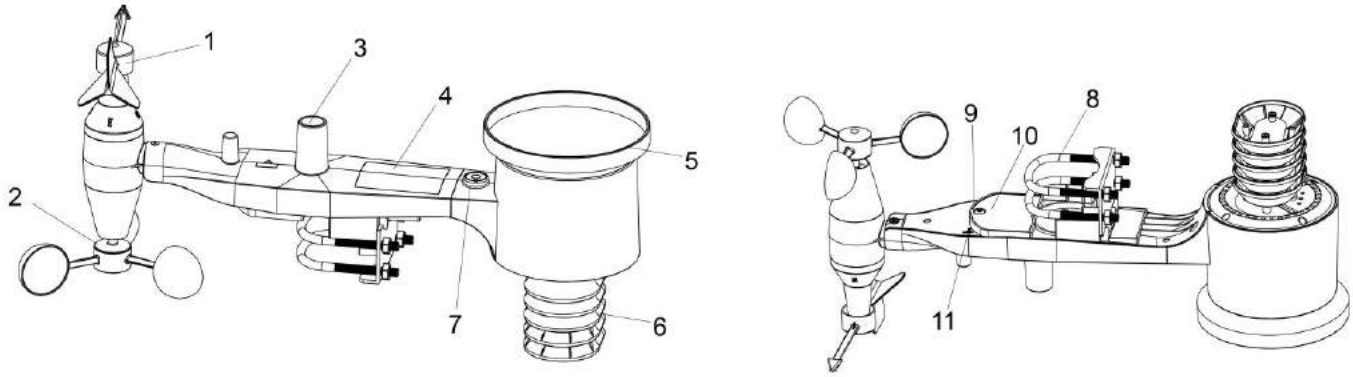

Figure 1

1. Wind Vane
2. Wind Speed Sensor
3. UV sensor/ Light sensor
4. Solar panel
5. Rain collector

6. Thermo-hygro sensor
7. Bubble level
8. U-Bolt
9. LED Indicator: light on for 4s if the unit power up. Then the LED will flash once every 16 seconds (the sensor transmission update period).
10. Battery door
11. Reset button

1.1. Install wind vane

Push the wind vane into the shaft. as shown in figure 1.
Tighten the set screw with as shown in figure 2. Wind vane moves not as free as wind speed sensor. This damp effect is helpful in keeping wind direction measurement steady.

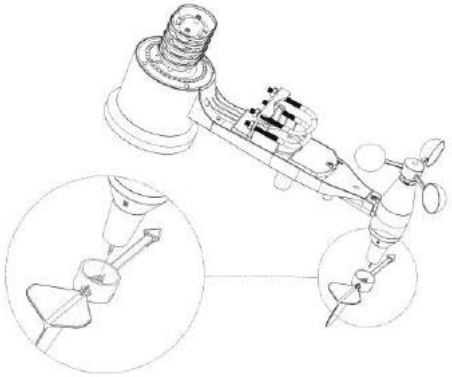

Figure 1

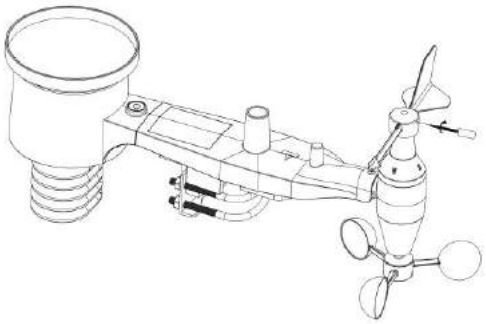

Figure 2

There are four alphabet letter of "N", "E", "S" and "W" around the wind direction, representing for the direction of North, East, South and West. Wind direction sensor has to be adjusted so that the directions on the sensor are matching with your real location. Permanent wind direction error will be introduced when the wind direction sensor is not positioned correctly during installation.

1.2. Install wind speed

Push the wind cup into the shaft. as shown in figure 3.
Tighten the set screw with as shown in figure 4. Make sure the wind speed spin freely.

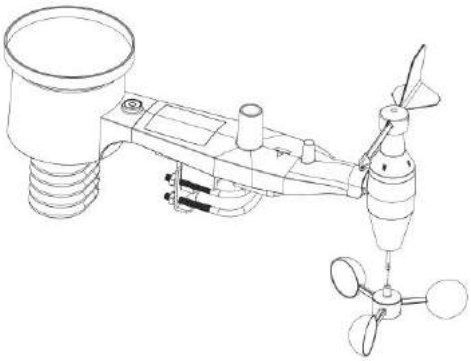

Figure 3

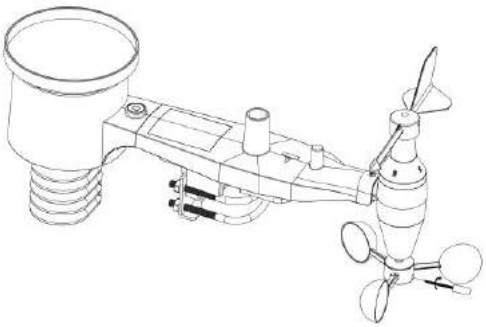

Figure 4

1.3. Install Batteries

Insert 2XAA batteries in the battery compartment. The LED indicator on the back of the transmitter will turn on for four seconds and normally flash once every 16 seconds (the sensor transmission update period).

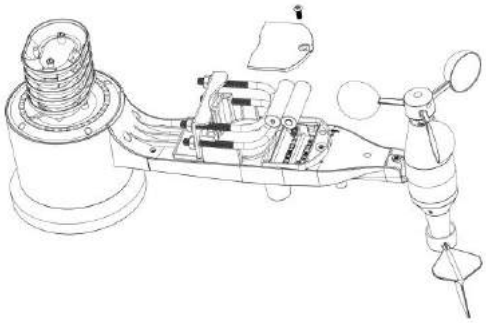

Figure 5

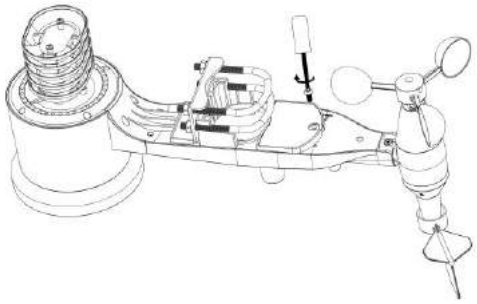

Figure 6

Note: If no LED light up or is lighted permanently, make sure the battery is inserted the correct way or a proper reset is happened. Do not install the batteries backwards. You can permanently damage the outdoor sensor

Note: We recommend lithium batteries for cold weather climates, but alkaline batteries are sufficient for most climates. Rechargeable batteries should never be used at all because they have lower voltages.

1.4. Mount outdoor sensor

Reference 8&9. The mounting assembly includes two U-Bolts and a bracket that tightens around a 1 to 2” diameter pole (included) using the four U-Bolt nuts.

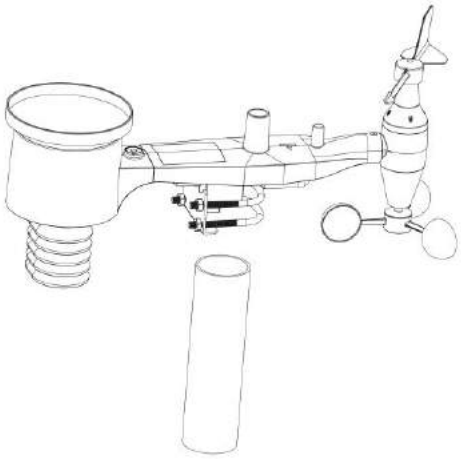

Figure 8

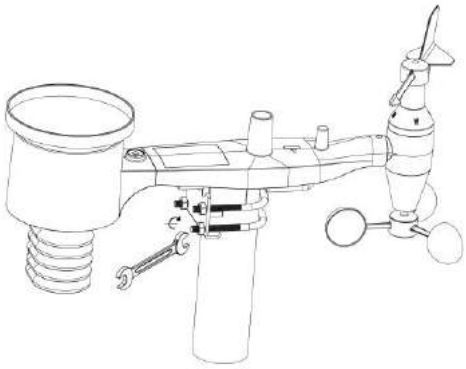

Figure 9

Use the bubble level beside the rain sensor as a guide to verify that sensors are level.

1.5 Reset Button and Transmitter LED

In the event the sensor array is not transmitting, reset the sensor array.

With an open ended paperclip, press and hold the **RESET BUTTON** for proper reset: LED turns on while RESET button pressed, and resume normal after Reset button is released: LED will be lit momently every 16s.

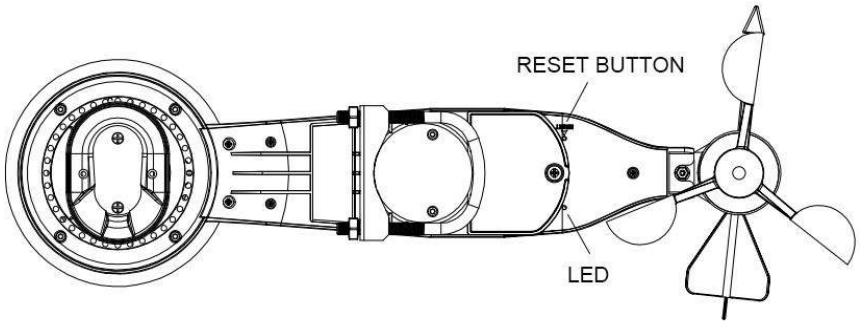

Figure 10

2. Best Practices for Wireless Communication

Note: To insure proper communication, mount the remote sensor(s) upright on a vertical surface, such as a wall. **Do not lay the sensor flat.**

Wireless communication is susceptible to interference, distance, walls and metal barriers. We recommend the following best practices for trouble free wireless communication.

1. **Electro-Magnetic Interference (EMI)**. Keep the console several feet away from computer monitors and TVs.
2. **Radio Frequency Interference (RFI).** If you have other 433 MHz devices and communication is intermittent, try turning off these other devices for troubleshooting purposes. You may need to relocate the transmitters or receivers to avoid intermittent communication.
3. **Line of Sight Rating.** This device is rated at 300 feet line of sight (no interference, barriers or walls) but typically you will get 100 feet maximum under most real-world installations, which include passing through barriers or walls.
4. **Metal Barriers.** Radio frequency will not pass through metal barriers such as aluminum siding. If you have metal siding, align the remote and console through a window to get a clear line of sight.

The following is a table of reception loss vs. the transmission medium. Each “wall” or obstruction decreases the transmission range by the factor shown below.

Medium	RF Signal Strength Reduction
Glass (untreated)	5-15%
Plastics	10-15%
Wood	10-40%
Brick	10-40%
Concrete	40-80%
Metal	90-100%

3. Display Unit Set up

3.1. Display Console Layout

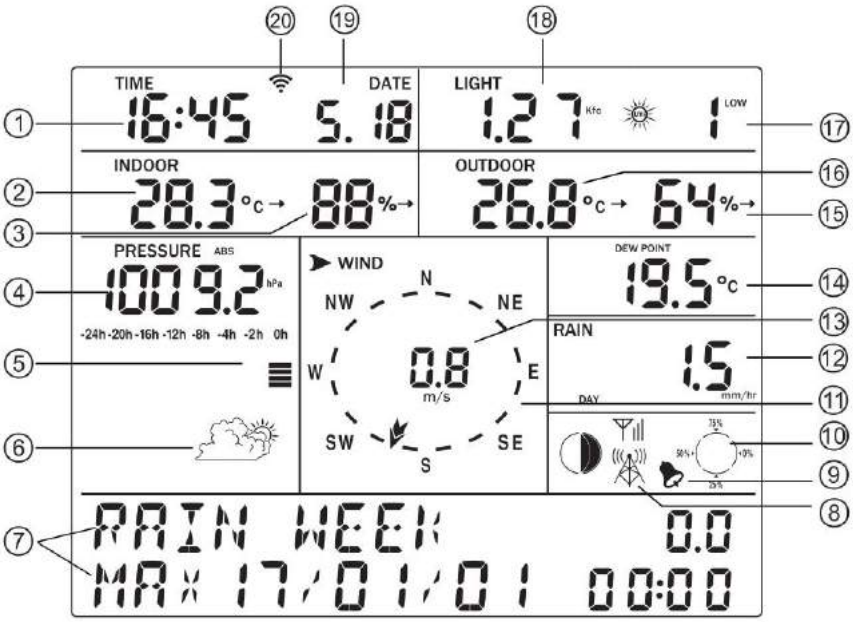

1.Time	2.Indoor Temperature
3.Indoor Humidity	4.Barometric Pressure
5. Barometric Pressure graph	6.Weather Forecast icon
7. Dynamic information display area	8. RF signal
9. Alarm icon	10. Memory status
11.Wind direction	12.Rain fall
13.Wind speed/Gust speed	14.wind chill/Dew point/Heat index
15.Outdoor Humidity	16.Outdoor Temperature
17.UV index	18.Light
19.Date	20.Wifi Signal icon

3.2. Initial Display Console Set Up

3.2.1 The unit will turn on all segments of the LCD for 5 seconds after power reset and display unit information(Frequency, FSK/ASK, EU/USA, Version) , then the unit will start to register the outdoor channel for 3 minutes.

3.2.2 Full display

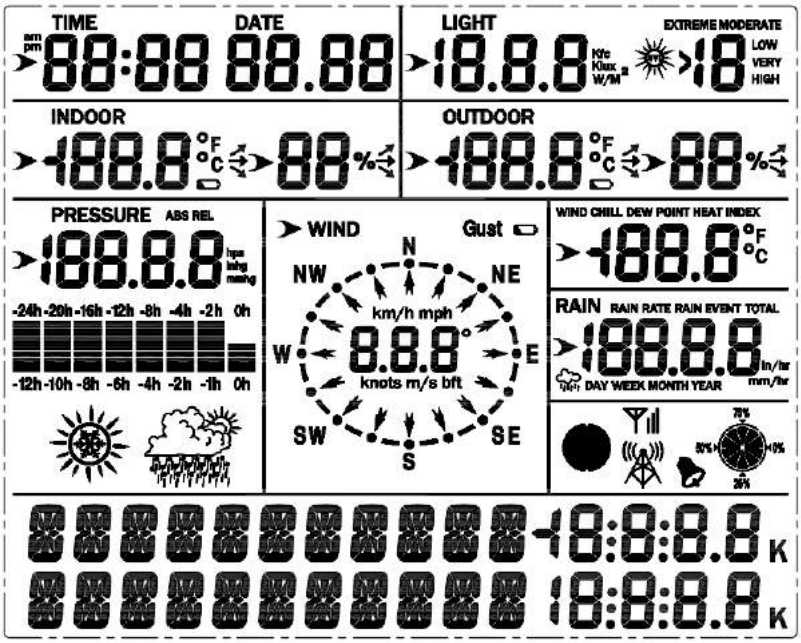

3.2.3 Key function

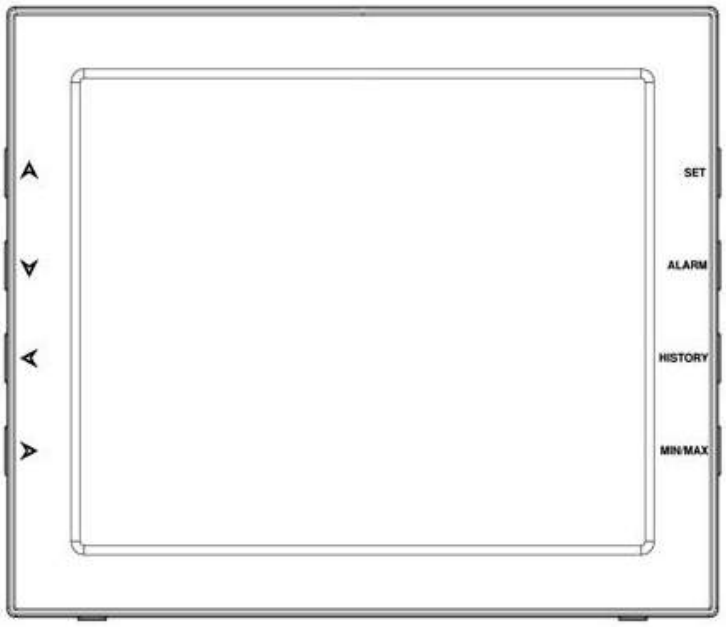

SET: Enter the setting mode

ALARM: Display high or low alarm function / turn on/off the alarm

HISTORY: Display history records / return to normal mode

MAX/MIN: Display the MAX, MIN value

⮝: Move to previous information(normal mode) or + (programming mode)

⮟: Move to next information(normal mode) or– (programming mode)

⮜:: Move to previous segment/move to main menu during setting.

⮞:: Move to next segment/ move to sub menu during setting.

Console Operation

Program mode

The screen is divided into 10 segments for selection and there are message display panel on the bottom.

There are six program modes: normal, setting mode, history mode, alarm mode, max/min mode and calibrated mode.
All the modes can be exited at any time by pressing the HISTORY key, or waiting for a 30 second timeout to take effect.

Normally, if the segment selected have multi parts, press SET key to choose different part. Example: the current section is RAIN, you can press SET key to alternate the display of RAIN RATE, RAIN EVENT, DAY, WEEK, MONTH, YEAR and TOTAL.

1. Quick Display Mode(Update every 5 Seconds)

In the normal mode press” ⮜ ”or” ⮞ ” key to switch among different segments. The respective chosen segment will be marked with the arrow symbol” ▶”. And there will be corresponding information display on the message board which is the lower 2 lines on the screen.

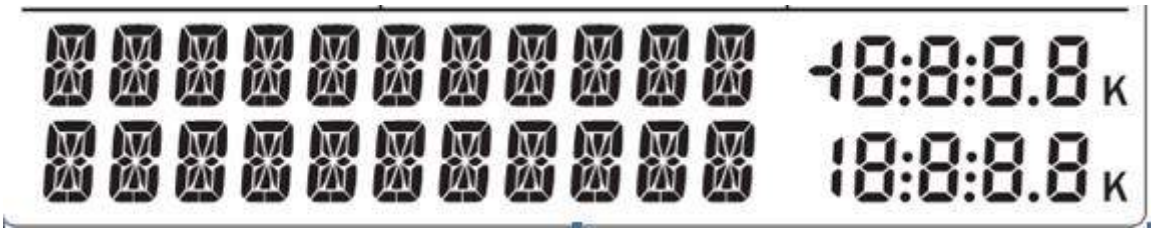

The 11 digits on left are used to display text, the right side displays figures. The display will automatically switch after a few seconds. Or use the “⮝” or “⮟” keys to manually switch the display.

If there are alarms occurred, the alarm information will be displayed in real time as well.

- Time and date

If the arrow symbol “▶” is in this segment, following information will appear on message board:

a) Year, Weekday
b) Alarm time and status of the alarm(on/off)

c) Moon phase. (Reference Section *Other Console Functions/Moon phase* for detail)
d) If connected with Wi-Fi, the device time will synchronize with the internet time(UTC Time, you need to set the time zone for local time).

- Light and UVI

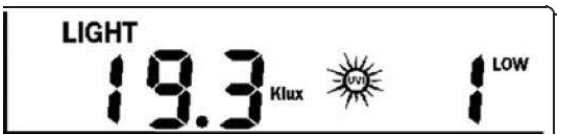

If the arrow symbol "▶" is in this segment, following information with time stamp will appear on message board:

a) The max light strength value of the day.
b) The max light strength value since the last reset
c) The max UV index value of the day.
d) The max UV index value since the last reset.

- Indoor temperature / humidity

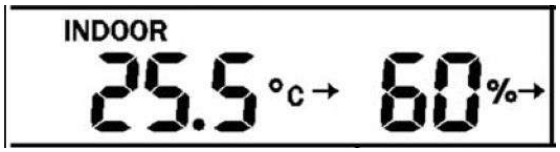

If the arrow symbol "▶" is in this segment, following information with time stamp will appear on message board:

a) Max indoor temperature value of the current day.
b) Min indoor temperature value of the current day.
c) Max indoor temperature value since the last reset
d) Min indoor temperature value since the last reset
e) Max indoor humidity value of the current day.
f) Min indoor humidity value of the current day.
g) Max indoor humidity value since the last reset
h) Min indoor humidity value since the last reset

- Outdoor temperature/ humidity

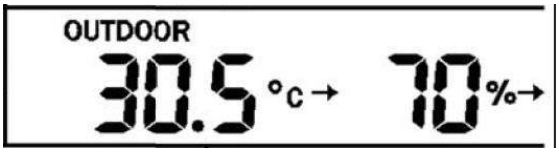

If the arrow symbol "▶" is in this segment, following information with time stamp will appear on message board:

a) Max outdoor temperature value of the current day.
b) Min outdoor temperature value of the current day.
c) Max outdoor temperature value since the last reset

d) Min outdoor temperature value since the last reset
e) Max outdoor humidity value of the current day.
f) Min outdoor humidity value of the current day.
g) Max outdoor humidity value since the last reset
h) Min outdoor humidity value since the last reset

- Barometric

If the arrow symbol "➤" is in this segment, following information with time stamp will appear on message board:

a) Max relatively barometric pressure of the current day
b) Min relatively barometric pressure of the current day
c) Max relatively barometric pressure since the last reset
d) Min relatively barometric pressure since the last reset
e) Max absolute barometric pressure of the current day
f) Min absolute barometric pressure of the current day
g) Max absolute barometric pressure since the last reset
h) Min absolute barometric pressure since the last reset

- Wind and gust speed

If the arrow symbol "➤" is in this segment, following information with time stamp will appear on message board:

a) The max wind speed of the current day
b) The max wind speed since the last reset.
c) The max wind gust speed of the current day
d) The max wind gust speed since the last reset.

- Wind chill, dew point, heat index

If the arrow symbol "▶" is in this segment, following information with time stamp will appear on message board:

a) Min wind chill temperature of the current day
b) Min wind chill temperature since the last reset
c) Max dew point temperature of the current day
d) Min dew point temperature of the current day
e) Max dew point temperature since the last reset
f) Min dew point temperature since the last reset
g) Max heat index of the day of the current day.
h) Max heat index of the day since the last reset

- Rainfall

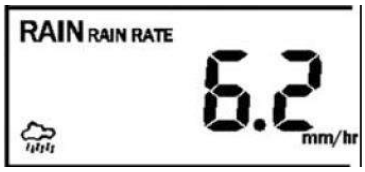

If the arrow symbol "▶" is in this segment, following information with time stamp will appear on message board:

a) Max rain rate of the current day
b) Max rain rate since the last reset
c) Max Rainfall data of current day
d) Max Rainfall data of last week
e) Max Rainfall data of last month
f) Max Rainfall data of last year

2. Setting Mode

In normal mode, press SET key for 2 seconds to enter the setting mode.
Then press " ◀ "button to transfer among different setting function :
TIME SETTING
UNIT SETTING
RECORD SAVE INTERVAL
RAIN SEASON SETTING
BAROMETRIC SETTING
KEY BEEP SETTING
CALIBRATION SETTING
TRANSMITTER ID

When the desired setting function is displayed, press the ”>” key to start the associated setting menu. Change a setting with the key ∧ / ∨ .Hold the ∧ / ∨ key for 2 seconds will increase/decrease digits in great steps. Press HISTORY key or wait for 30 seconds at any time, device will return to normal mode.

- TIME SETTING

  After entering setting mode, the first setting function “TIME SETTING” will appear on message board. Use the ”>” key to select the desired sub functions:

  a) TIME FORMAT:12H/24H
  b) DATE FORMAT:MM-DD-YYYY / DD-MM-YYYY / YYYY-MM-DD select
  c) TIME: Manual setting of time and date
  d) TIME ZONE
  e) DAYLIGHT SAVING TIME: switch on/off the reception of DST.
  f) NORTH/SOUTH: Set northern/southern hemisphere for moon phase

- UNIT SETTING

  After entering setting mode, the first setting function ”TIME SETTING” will appear on message board. Press”< ”key to switch to “UNIT SETTING” display.
  Then use the ”>” key to select the desired sub functions:

  a) Light unit select (lux, fc, w/m2)
  b) Temperature unit select (C, F)
  c) Pressure unit select (hpa, inhg, mmhg)
  d) Wind speed unit select (km/h, mph, knots, m/s, bft)
  e) Rainfall unit select (mm, inch)

- RECORD SAVE INTERVAL: to set the interval of data recording.

  Under setting mode, the first setting function appear on message board is ”TIME SETTING”, Press”< ”key repeatedly to switch to “RECORD SAVE INTERVAL” display.
  Use the ”>” key to start setting of recording interval.
  Use the ∧ / ∨ keys to select the desired recording interval for measured values.

- RAIN SEASON SETTING

  Under setting mode, the first setting function appear on message board is ”TIME SETTING”. Press”< ”button repeatedly to switch to “RAIN SEASON SETTING” display.
  Press the ”>” button to start setting of the month of rain season. Press the ∧ / ∨ buttons to select the month from January to December.

  Rain season is the time of year when most of a region’s average annual rainfall occurs. Rain season influence the annual rainfall maximum, minimum and total value. When one month was selected, the annual rainfall and annual max/min rainfall were zero clearing at 0:00 of the first day of the selected month.

- PRESSURE SETTING

  Under setting mode, the first setting function appear on message board is ”TIME SETTING”. Press”< ”button repeatedly to switch to “BAROMETRIC SETTING” display.

Then press the "➢" button to select the desired sub functions:

BAROMETRIC COORDINATES: Press ⮝ / ⮟ buttons to change the historical graph time between 12 and 24 hours.

- KEY BEEP SETTING

  Under setting mode, the first setting function appear on message board is "TIME SETTING". Press"⮜ "button repeatedly to switch to "KEY BEEP SETTING" display.
  Use the "➢" button to start setting button beep.
  Press ⮝ / ⮟ buttons to switch on/off the button beep.

- Calibration setting

  a) IN TEMP OFFSET
  Offset for indoor temperature.
  b) IN HUMI OFFSET
  Offset for indoor humidity.
  c) OUT TEMP OFFSET
  Offset for outdoor temperature.
  d) OUT HUMI OFFSET
  Offset for outdoor humidity
  e) ABS PRESS OFFSET
  Offset for absolute barometric pressure.
  f) REL PRESS OFFSET
  Offset for relatively barometric pressure.
  g) WIND DIR OFFSET
  Wind direction can be adjusted by 0-359° .For southern hemisphere installations, the wind direction need to change by 180° .
  h) WIND SPEED
  Wind speed calibration coefficient: default 1 (range is Range is 0.1-2.5)
  i) RAINFALL FACTOR
  Rain factor calibration coefficient: default 1 (range is Range is 0.1-2.5)
  j) RAIN DAY CALIBRATION
  Calibration for total rain falls of 1 day. (Range is 0-9999mm)
  k) RAIN WEEK CALIBRATION
  Calibration for total rain falls of 1 week (Range is 0-9999mm)
  l) RAIN MONTH CALIBRATION
  Calibration for total rain falls of 1 month (Range is 0-9999mm)
  m) RAIN YEAR CALIBRATION
  Calibration for total rain falls of 1 year (Range is 0-9999mm)
  n) RAIN TOTAL CALIBRATION
  Calibration for total rain falls since last reset. (Range is 0-9999mm)

- Transmitter ID

  Display the transmitter ID.

3. ALARM MODE

In normal mode, press ALARM key you will enter high alarm mode, and press ALARM key again you will switch to low alarm mode.

- HIGH ALARM SETTING

  Press <</>> key to transfer among the different segments and press ∧/∨ key to adjust the value of the high alarm.

  a) TIME ALARM –Set time alarm.
  b) In TEMP HIGH ALARM --Set indoor temperature high alarm
  c) In HUMI HIGH ALARM --Set indoor humidity high alarm
  d) Out TEMP HIGH ALARM Set outdoor temperature high alarm
  e) Out HUMI HIGH ALARM Set outdoor humidity high alarm
  f) ABS BARO HIGH ALARM --Set absolute barometric pressure high alarm
  g) REL BARO HIGH ALARM --Set relatively barometric pressure high alarm
  h) WIND HIGH ALARM --Set wind speed high alarm
  i) GUST HIGH ALARM --Set gust speed high alarm
  j) DEW POINT HIGH ALARM --Set dew point high alarm
  k) HEAT INDEX HIGH ALARM --Set heat index high alarm
  l) RAIN RATE HIGH ALARM --Set rainfall rate high alarm
  m) RAIN DAY HIGH ALARM --Set rainfall day high alarm

- LOW ALARM SETTING

  a) In TEMP LOW ALARM--Set indoor temperature low alarm
  b) In HUMI LOW ALARM --Set indoor humidity low alarm
  c) In TEMP LOW ALARM --Set outdoor temperature low alarm
  d) OUT HUMI LOW ALARM --Set outdoor humidity low alarm
  e) ABS BARO LOW ALARM --Set absolute barometric low alarm
  f) REL BARO LOW ALARM --Set relatively barometric low alarm
  g) WIND CHILL LOW ALARM --Set wind chill low alarm
  h) DEW POINT LOW ALARM --Set dew point low alarm

Under alarm mode, press the SET button to switch on or/off the alarm.
Press the ALARM button to switch between high alarm and low alarm setting.
Press HISTORY button or wait for 30 seconds at any time to return to normal mode.

When the alarm is activated, the alarm icon will be displayed on the right of message board.

When an alarm is triggered, the base station will emit a sound beep and the alarm icon flashes. The corresponding text alarm message appears on the message board. Press any button to stop sound beep. But the alarm icon will continue to flash if the weather data still above or below the threshold.

4. Max/Min Mode

In Normal Mode, press the MIN/MAX button to enter the max/min mode. In this mode, you can view all minimum/maximum records of weather parameters.

Press MIN/MAX to switch among below records:

TODAY MAX—The maximum values during current day
HISTORY MAX –The maximum values since last reset
TODAY MIN --The minimum values during current day
HISTORY MIN --The minimum values since last reset

Press ⮜/⮞ button to switch among max/min records of different parameter, together with the time and date stamp.

Each Maximum/minimum value can be cleared by pressing SET button for 2 seconds during this mode.
Press the HISTORY button or wait for 30 seconds will lead to Normal Mode.

5. History mode

In normal mode, press the history button switch to history. In this mode, you can view individual history data records in internal memory. The base station can log 3552 records in total.

If no history data, it will show “HISTORY NONE RECORD” on the message board. Otherwise it will display message e.g. ”HISTORY P/R 1.01”and “YEAR 16.06”.

P 1=Page 1 (Each page has 32 data records)
R 01= data record 01
YEAR 16=year 2016

The time and date of the record displays on the time section..

Press the ⮝/ ⮟ button to switch to next/pre record.
Press the ⮜/⮞ button to switch to next/pre page.

Under history mode, push the “SET” button for 2 seconds to clear all the memory.

Other Console Functions

Weather Tendency indicators

There are arrow symbols besides the indoor/outdoor temperature and humidity segments to indicate weather trend**:**

Tendency indicators		humidity	Temperature

↗	Rising	Rising rate>= 10% within 30 minutes	Rising >= 1℃ within 30 minutes
→	Steady	Change rate < 10% within 30 minutes	Change rate < 1℃ within 30 minutes
↘	Falling	Falling rate >= 10% within 30 minutes	Falling >= 1℃ within 30 minutes

Moon Phases

Icon: Northern Hemisphere	Moon Phase Description	Icon: Southern Hemisphere
	NEW MOON	
	WAXING CRESCENT MOON	
	FIRST QUARTER MOON	
	WAXING GIBBOUS MOON	
	FULL MOON	
	WANING GIBBOUS MOON	
	LAST QUARTER MOON	
	WANING CRESCENT MOON	

Beaufort Scales (Wind Speed)

Wind speed	Beaufort number	Description
0-1mph（0-1.6kph）	0	Calm
1-3mph（1.6-4.8kph）	1	Light air
3-7mph（4.8-11.3kph）	2	Light breeze
7-12mph（11.3-19.3kph）	3	Gentile breeze
12-18mph（19.3-29.0kph）	4	Moderate breeze
18-24mph（29.0-38.6kph）	5	Fresh breeze
24-31mph（38.6-49.9kph）	6	String breeze
31-38mph（49.9-61.2kph）	7	Near gale
38-46mph（61.2-74.1kph）	8	Gale
46-54mph（74.1-86.9kph）	9	Strong gale
55-63mph（88.5-101.4kph）	10	Storm
64-73mph(103-117.5kph)	11	Violent storm
74mph or above（119.1kph）	12	Hurricane

Specification

Outdoor data

Transmission distance in open field : 100m(330 feet)
Frequency : 433/868/915 MHz(optional, 915MHZ is for North America)

Temperature range : -40˚C--60˚C (-40℉ to +140℉)
Accuracy : + / - 1 °C(2 °F)
Resolution : 0.1˚C(0.1 °F)

Measuring range rel. humidity : 10%～99%
Accuracy : +/- 5%

Rain volume display : 0 – 9999mm (show --- if outside range)
Accuracy : + / - 10%
Resolution : 0.3mm (if rain volume < 1000mm)
1mm (if rain volume > 1000mm)

Wind speed : 0-50m/s (0~100mph) (show --- if outside range)
Accuracy : +/- 1m/s (wind speed< 5m/s)
+/-10% (wind speed > 5m/s)
UVI range : 0 to 15 index
Light : 0-200k Lux
Accuracy : +/-15%
Measuring interval outdoor sensor: 16 sec

Indoor data

Measuring interval pressure / temperature : 48 sec
Indoor temperature range : 0˚C--50˚C (14°F to + 140°F) (show --- if outside range)
Resolution : 0.1˚C

Measuring range rel. humidity : 10%～99%
Resolution : 1%

Measuring range air pressure : 300-1100hPa (8.85-32.5inHg)
Accuracy : +/-3hpa under 700-1100hPa
Resolution : 0.1hPa (0.01inHg)
Alarm duration : 120 sec

Power consumption

Base station : 5V DC adaptor (included)
Base station : 3X AA 1.5V LR6 Alkaline batteries (not included)
Remote sensor : 2X AA batteries (not included), The primary power source is the solar panel. The batteries provide backup power when there is limited solar energy

Remark: Where outdoor temperature is lower than -20˚C, make sure proper type of batteries to be used to assure that the device can get enough power to maintain its function properly. Normal alkaline batteries is not allow to be used if the outdoor temperature is lower than -20 ˚C, the battery's discharging capability is greatly reduced.

Live Internet Publishing

This weather station sends data to three free hosting services:

Hosting Service	Website	Description
Weather Undergound	WeatherUndeground.com	Weather Underground is a free weather hosting service that allows you to send and view your weather station data real-time, view graphs and gauges, import text data for more detailed analysis and use iPhone, iPad and Android applications available at Wunderground.com. Weather Underground is a subsidiary of The Weather Channel and IBM.
Weather Cloud	WeatherCloud.net	Weathercloud is a real-time weather social network formed by observers from around the world.
Weather Observation Website (WOW)	wow.metoffice.gov.uk	The UK Met Office Weather Observation Website (WOW). WOW allows anyone to submit their own weather data, anywhere in the world.

This weather station sends data to the Internet by using your WiFi connection.

Connecting the Weather Station Console to WiFi

Note: a. Make sure your mobile device is connected to your WiFi network before operation.

b. To connect the weather station to WiFi, you must first download the application from one of the following choices:

- Apple App Store
- Google Play Store

c. The Wi-Fi feature only works when the display console is plugged into DC power due to higher energy requirements.

1. On your mobile device, visit the Apple App Store or Google Play Store and search for the “**WS View**” application. Download this application to your mobile device.
2. Run the **WS View** application, and enter the main interface:

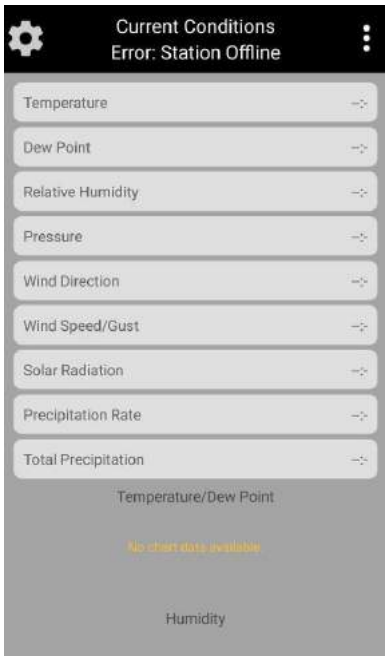

Note: If you don't have an account on wunderground.com, please press **Register on WU** and create a WU account and save the station ID and password for the future usage.

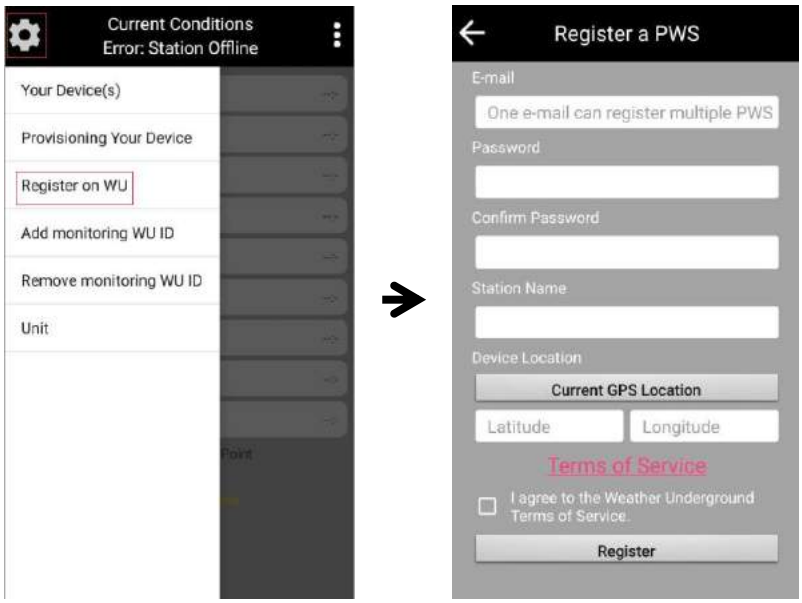

3. Read and follow the tips to operate the display console(receiver):
   (1) Plug the console with an AC adapter.
   (2) Press and hold the ⮝ and **Alarm** buttons at the same time for five seconds.
   (3) The Wi-Fi icon will begin flashing rapidly, and the following words will display on the message board: **WIFI STATUS MODE -- B**, indicating the console is entering the WIFI connecting mode.

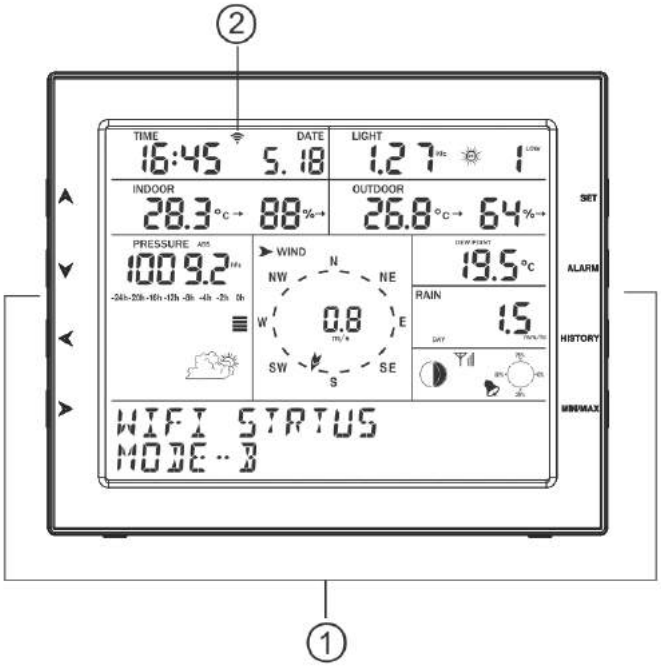

Wi-Fi icon: 

4. While the Wi-Fi icon is flashing, check the **WLAN** on your mobile phone and find the EasyWeather-WiFi. Make sure your phone is connected to EasyWeather-WiFi and select NO when the message "No Internet access" appears(If connected fail, close all the background running program on the mobile and try it again).

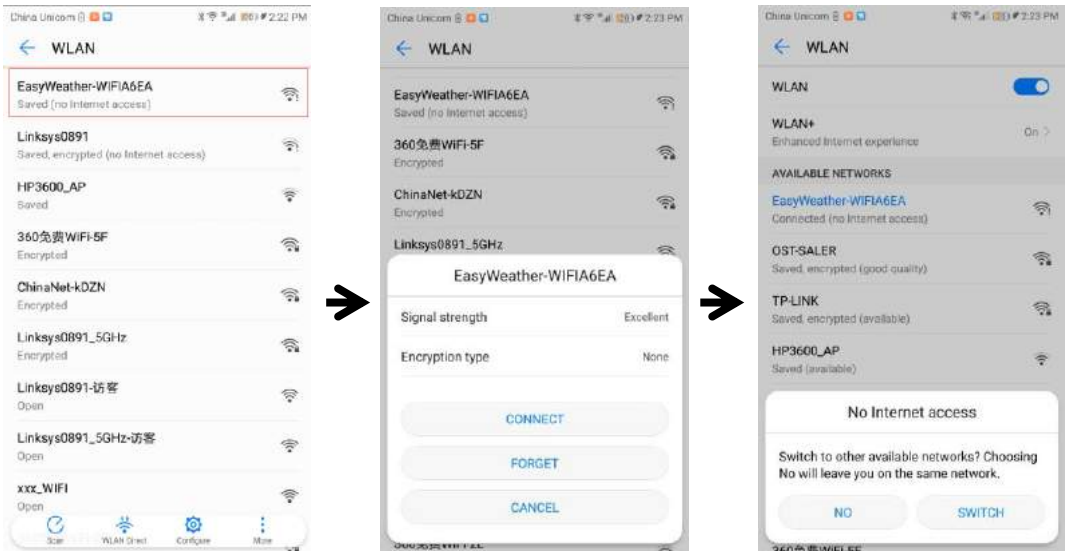

5. Back to the app and select **Provisioning Your Device** and then press **NEXT** to enter the **Upload** page.

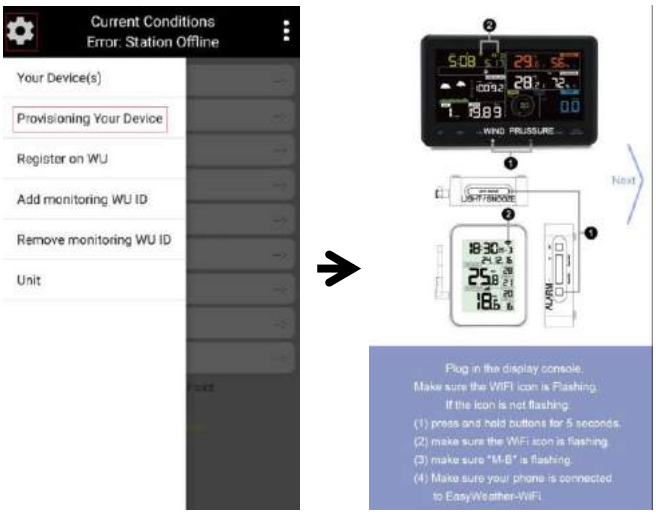

Enter your station ID and password for the weather server and press **Save**. Your station ID of wunderground.com will be added on the **WU Station List**.

Press **Next** till enter the WIFI Mode page. Press **Scan** and select your Router SSID and enter the WIFI Password.

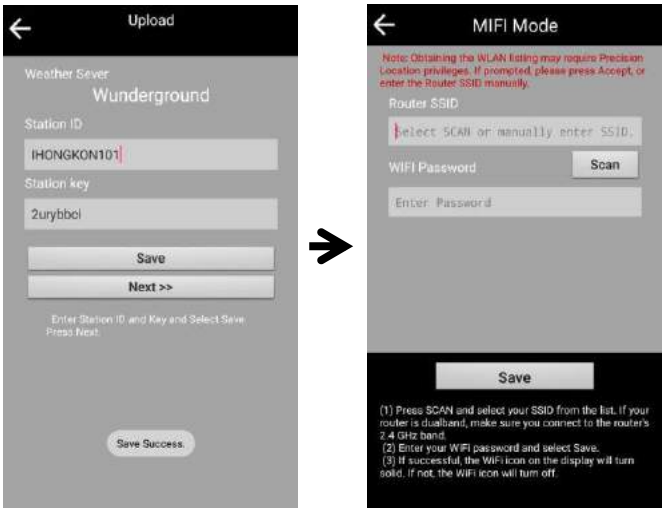

6. Click **Save** and a "**AMET**" message will show up, press **OK**. Then it'll turn to the main interface. Your station ID will display on the **WU Station List**.

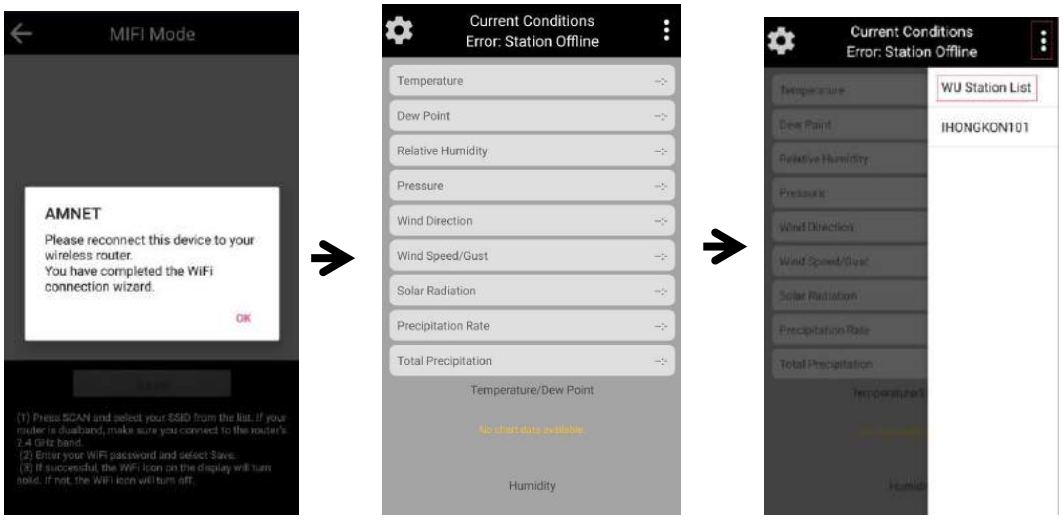

Note: Once the console has connected to your WiFi network, the Wi-fi icon on the console will stop flashing and become solid.

Basic Functions:

Check weather data and graph

Choose the Station you want to check on the **WU Station List** and see the current weather data and graph (data achieved from the Wunderground.com).

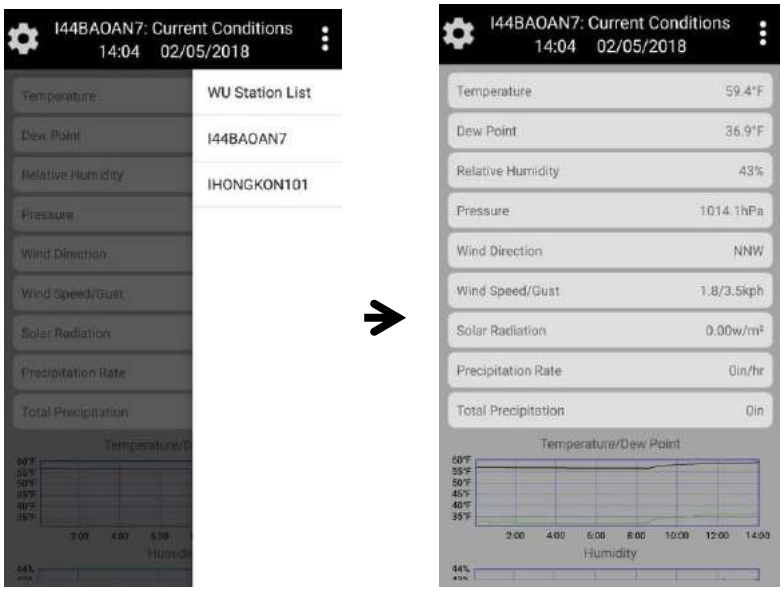

Note:

1. The data will be updated every 5 minutes.
2. You can use this app to view current weather data and graph of your station on WU. For Weather Cloud/WOW, you need to download the related apps or view the weather data of your station on their website.

Your Device(s)

Once the device is connected successfully with WIFI, it will display on **Your Device(s).**

Tap the device to view or change the station setting.

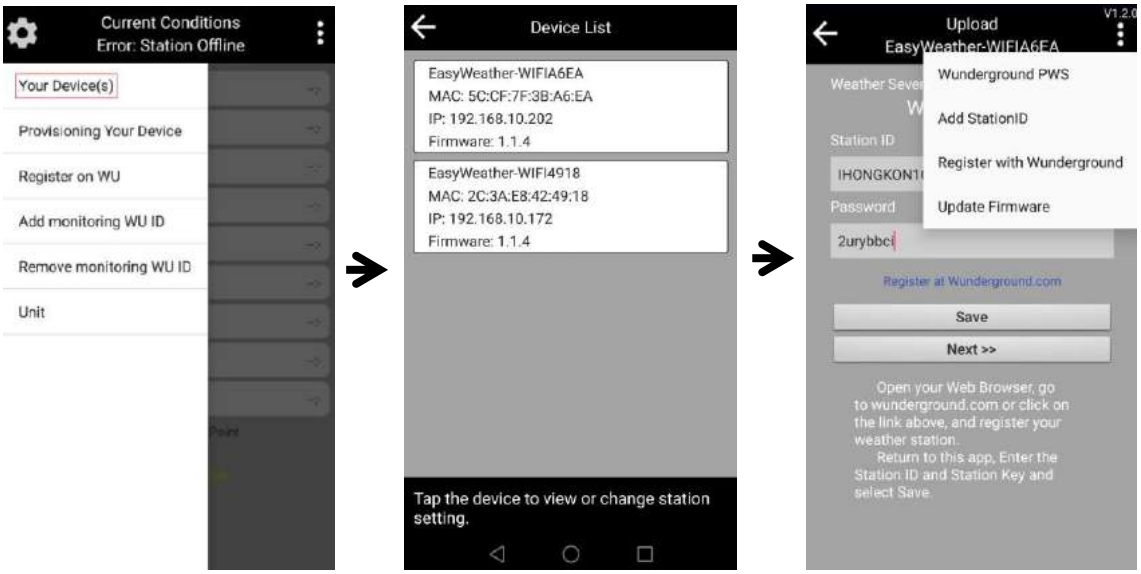

Add monitoring WU ID

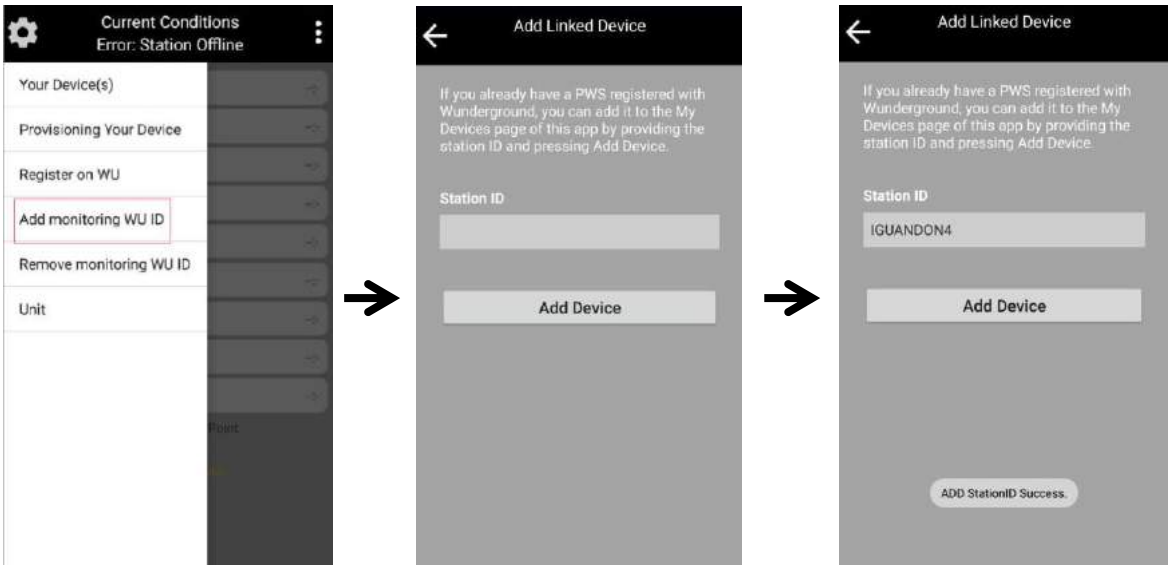

Remove monitoring WU ID

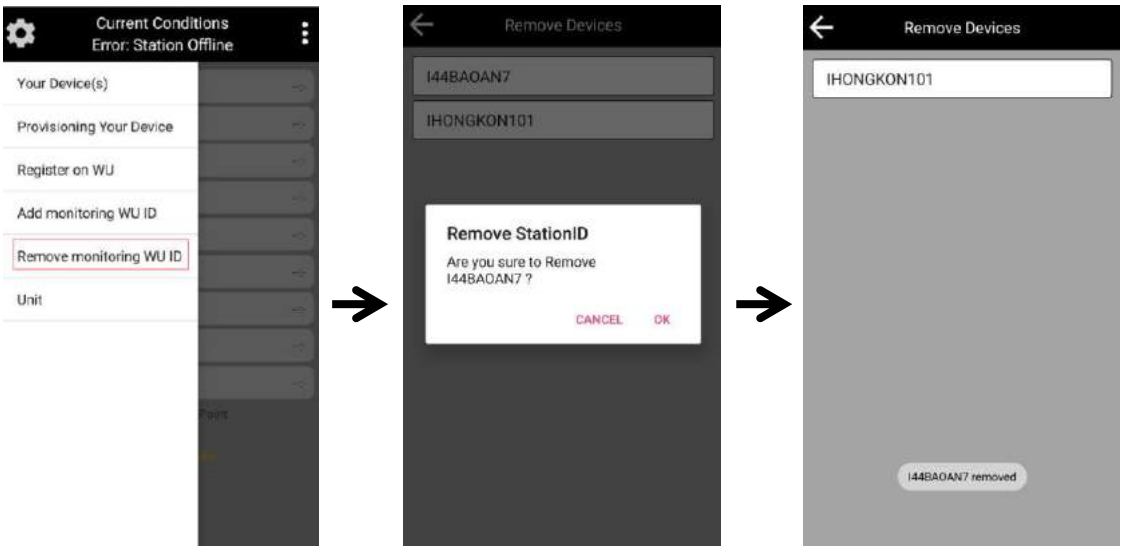

Set Unit

Click the **Unit** on the setting column of the main interface to set the units for temperature, pressure, wind speed and rain.

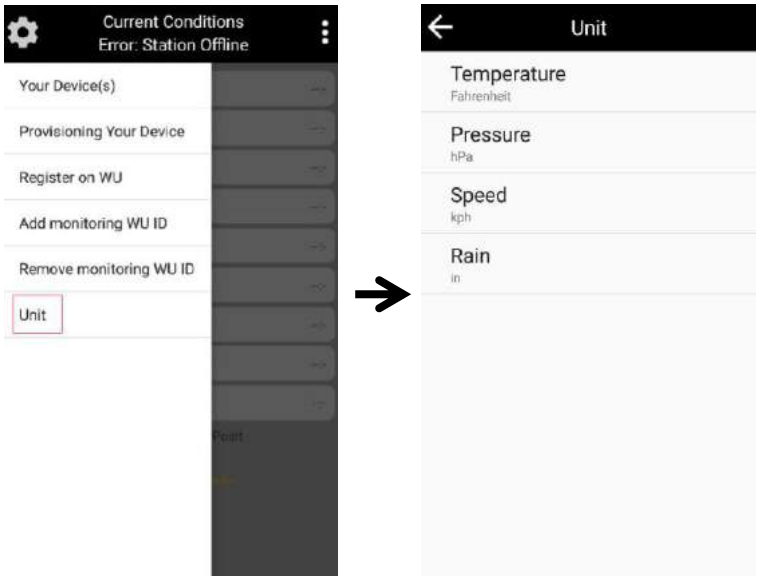

Registering with WeatherUnderground.com and WeatherCloud.net

WeatherUnderground.com

Registering through the PC or Mac Website

1. Visit Wunderground.com and select the **Join** link at the top of the page. Select the **Free** sign up option.

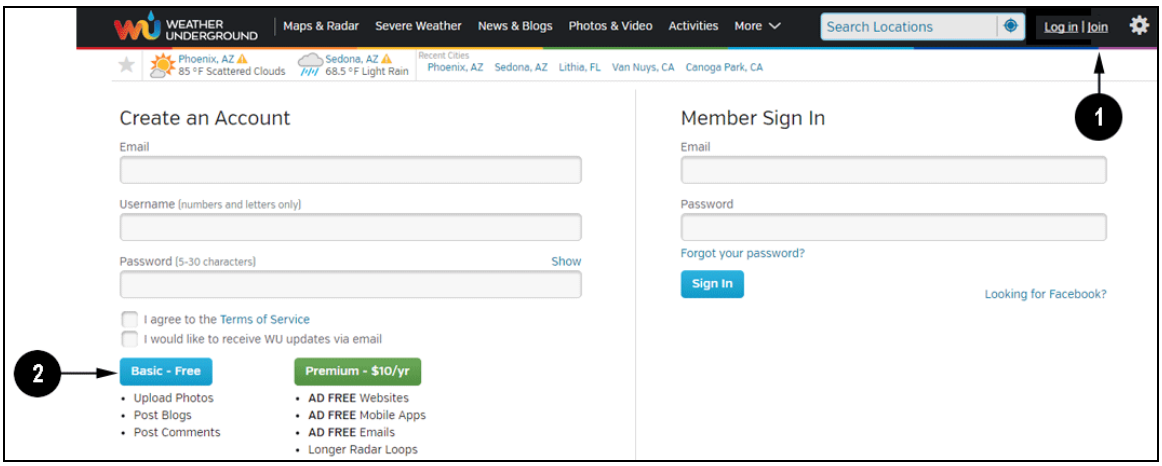

2. Select **More | Register Your PWS**.
3. Click **Send Validation Email**. Respond to the validation email from Wunderground (it may take a few minutes).

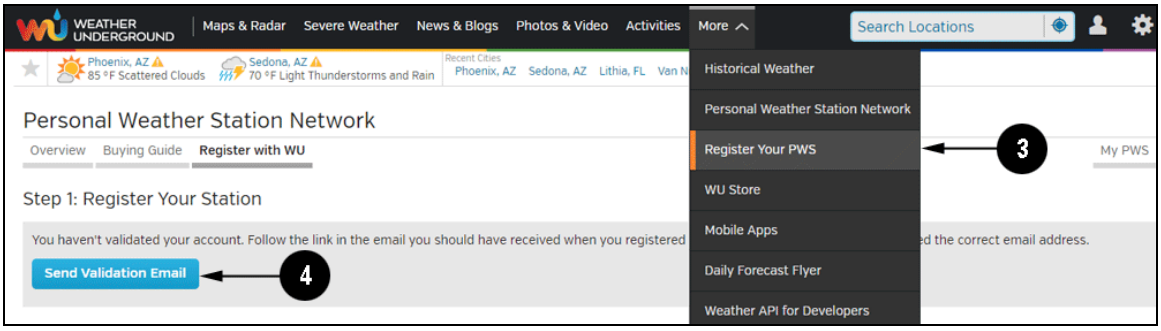

4. Select More | Register Your PWS again and enter all of the information requested.

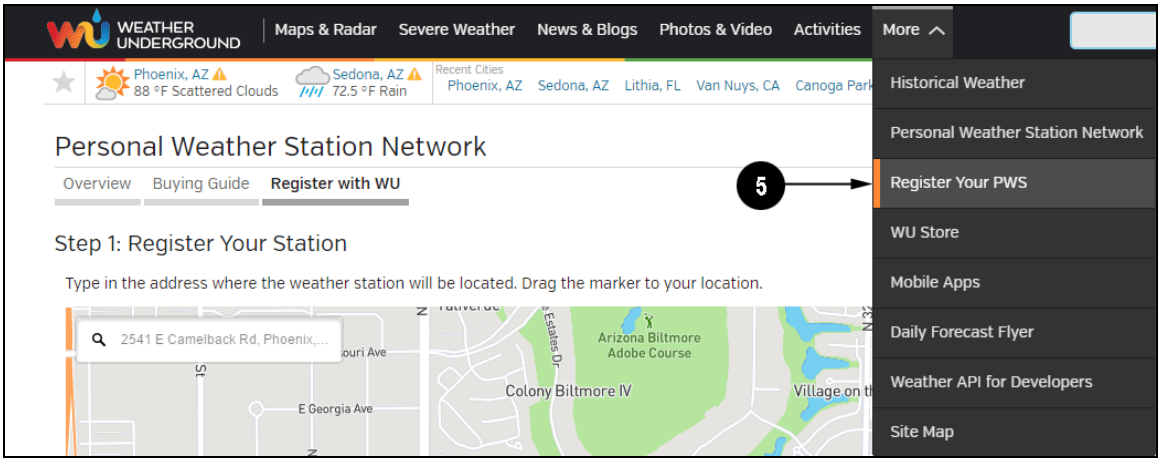

5. After registering your station, make a note of the following:
   - Station ID
   - Station Key / Password

Enter the Station ID (ID) and Station Key (Password) into the WS Tool.

Below figure is an example, and your station ID and password will be different.

Congratulations. Your station is now registered with Wunderground!

You are almost done. Now go to your weather station software and add the following:

Your Station ID:

KAZPHOEN424

Your Station Key/Password:

mdreeley

Note: Your station ID will have the form: KSSCCCC###, where K is for USA station (I for international), SS is your state, CCCC is your city and ### is the station number in that city.

In the example above, KAZPHOEN424 is in the USA (K), State of Arizona (AZ), City of Phoenix (PHOEN) and #424.

Viewing your Data on Wunderground.com

There are several ways to view your data on Wunderground:

Web Browser

Visit:

http://www.wunderground.com/personal-weather-station/dashboard?ID=STATIONID

where **STATIONID** is your personal station ID (example, KAZSEDON12).

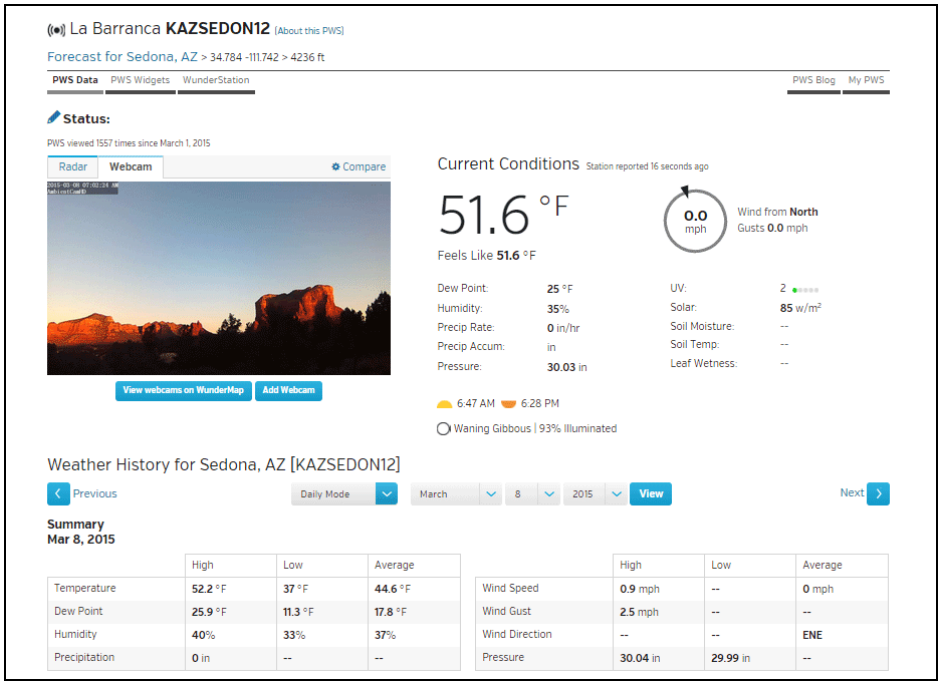

WunderStation iPad App

Visit:

http://www.WunderStation.com

to download the WunderStation iPad app.

Mobile Apps

Visit:

http://www.wunderground.com/download/index.asp

for a complete list of Mobile apps for iOS and Android. Alternately, you can find your data on your mobile device's web browser.

WeatherCloud

1. Visit WeatherCloud.net and enter a Username, Email and Password.

2. Respond to the validation email from WeatherCloud (it may take a few minutes).

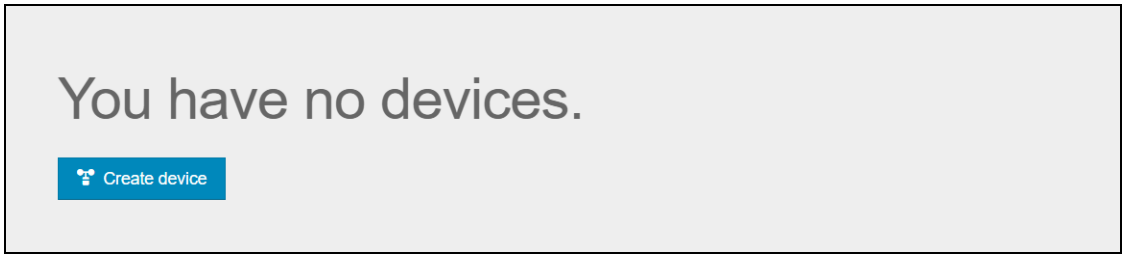

3. Select **Create Device** and enter your weather station information. After registering your station, make a note of the following:
4.

- Weathercloud ID
- Key

Enter the Weathercloud ID (ID), Key (password) into the WS Tool.

PC Software Operation

This professional weather station set includes a PC software for remote set or monitor on your computer or laptop.

Connect the display console with the pc software:

1. Decompress the **WeatherSmart for Wifi** file from CD, open the **WeatherSmart for Wifi** Setup.exe to install the software.
2. Before connect the display console to PC, you need to ensure the device has connected to wifi via app **WS Tool**. And then make sure your PC has used the same wifi network(You need additional wireless network card(not included) to connect the wifi for desktop computer).
3. Launch the software and select the IP address(check the properties of the wifi network on your computer to find the IP address) and click OK.

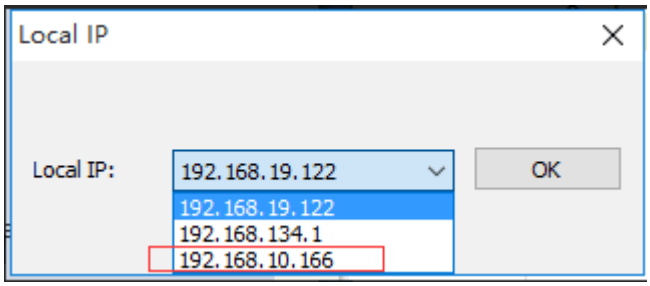

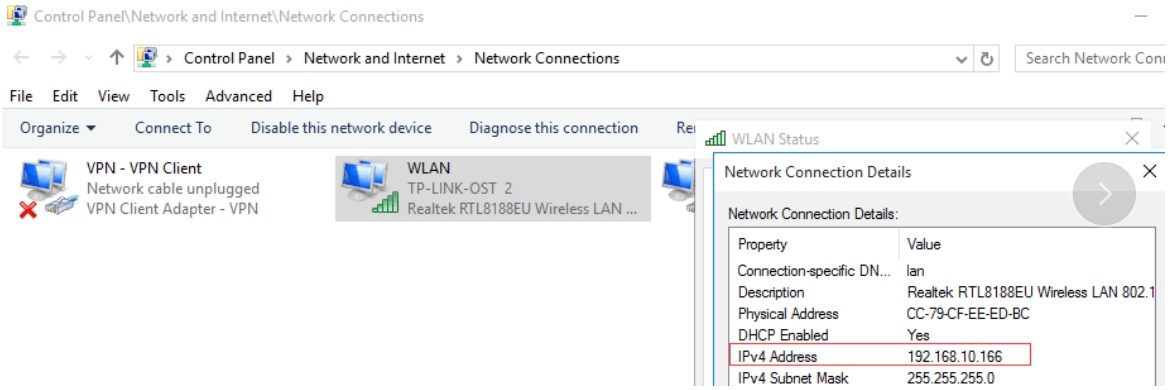

4. Under **System** column, click **Select Device** and choose the right device(name shows on the **Device List** of **WS Tool** app). Click OK.

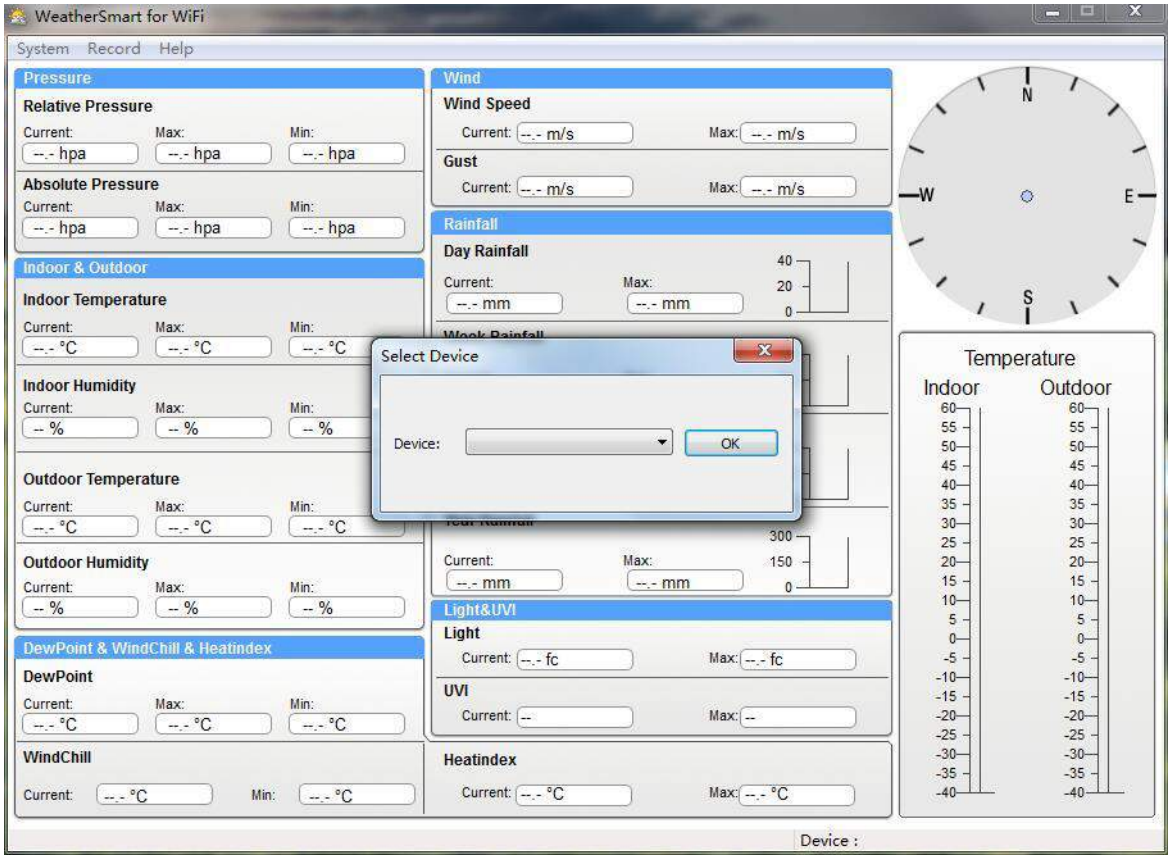

5. Then it takes several minutes for the display console to connect the pc software.
6. When Connected successfully and the pc soft will display the weather data from the

console

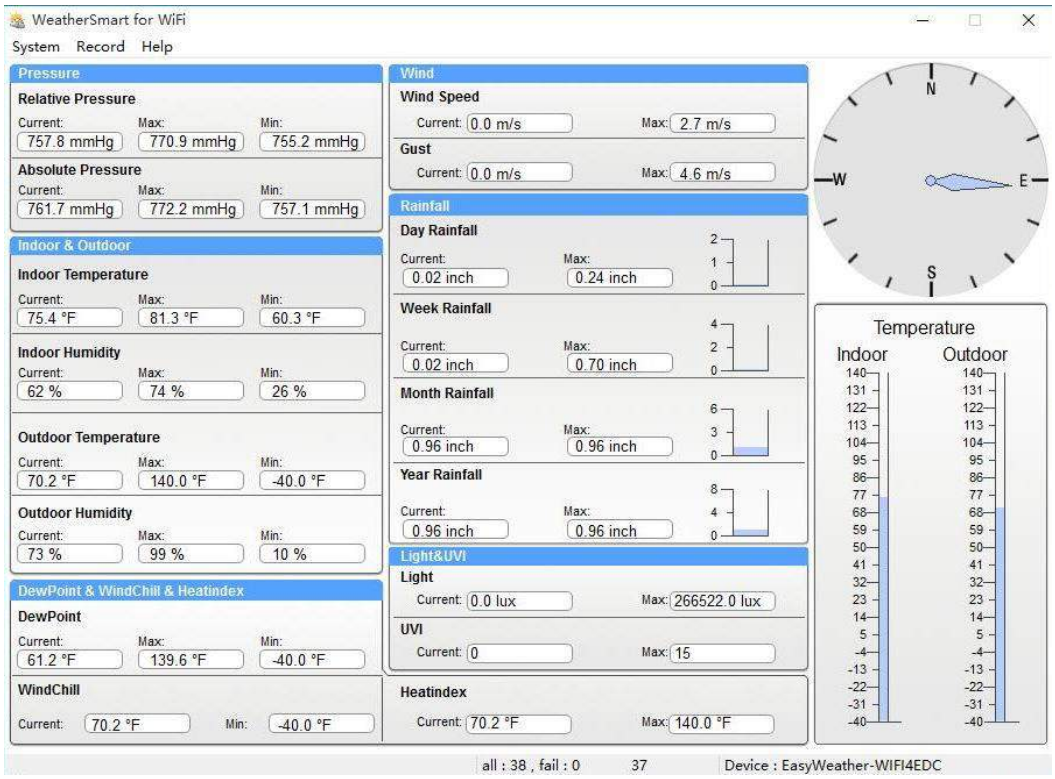

7. Basic Functions of the "**WeatherSmart for Wifi"** Software

System

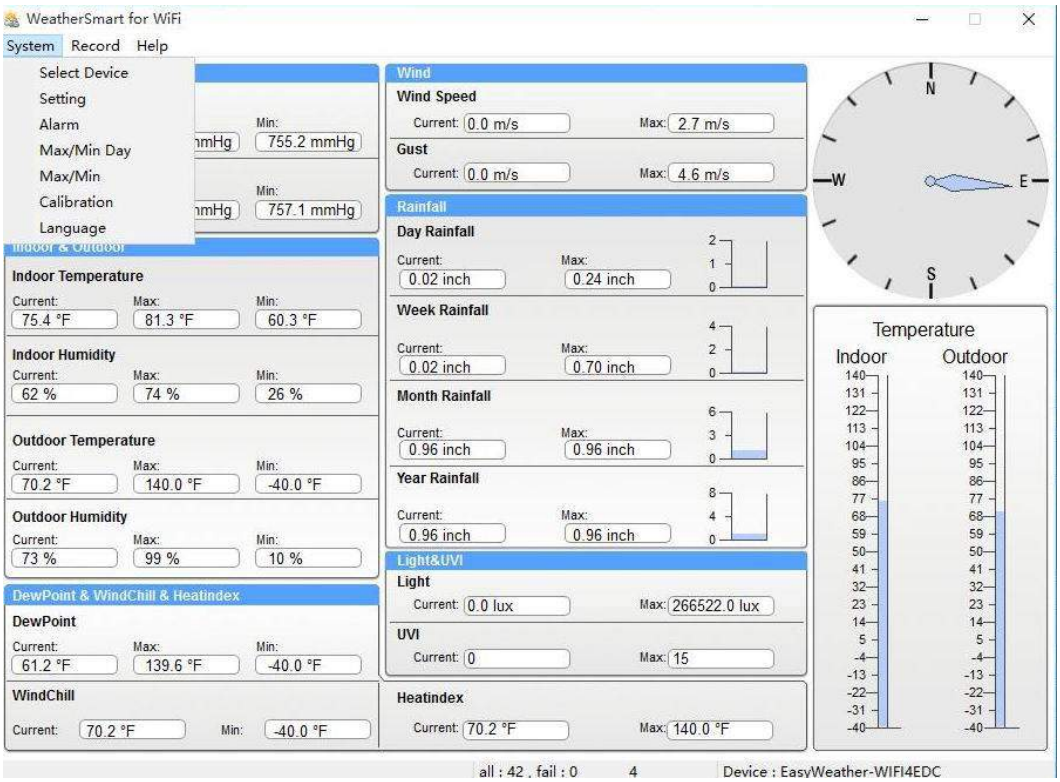

Setting

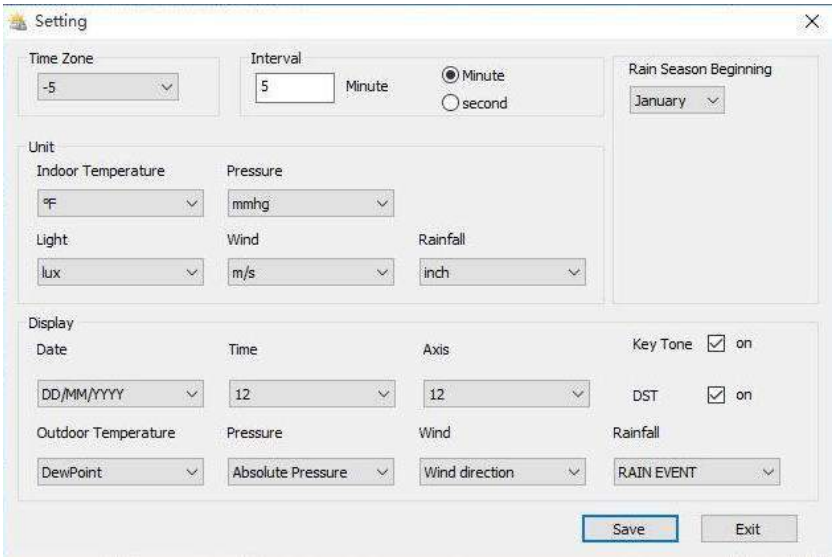

Alarm

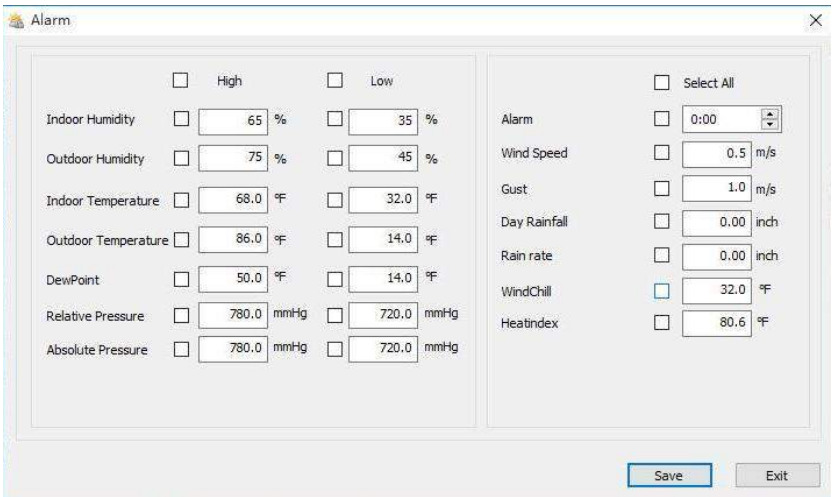

Max/Min Day

Max/Min History

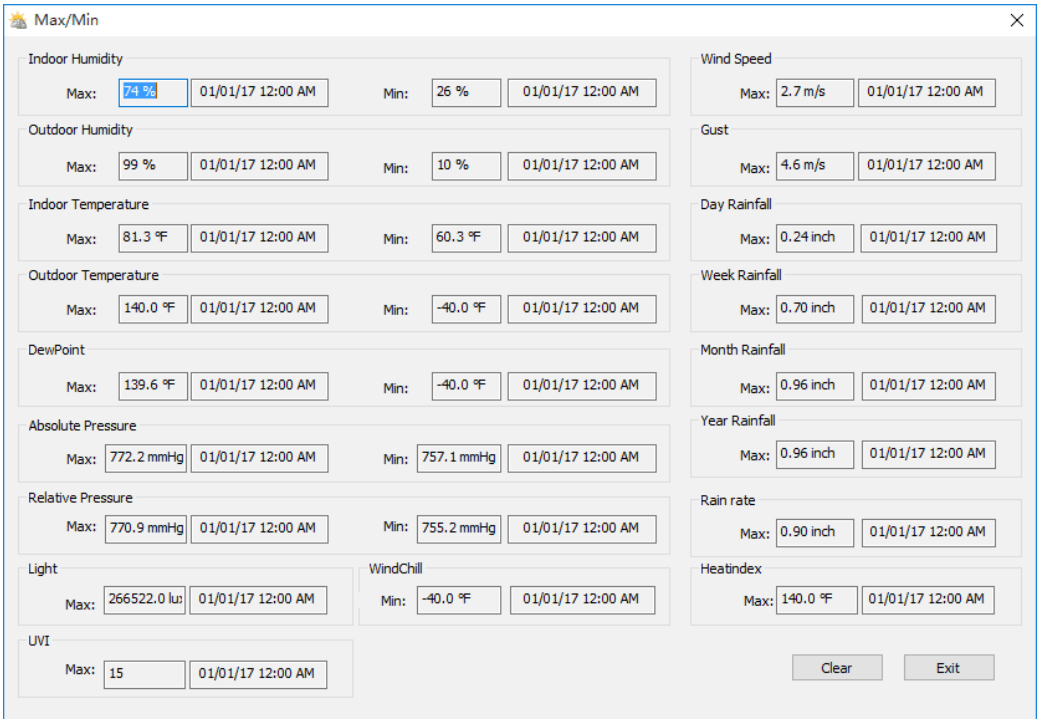

Calibration

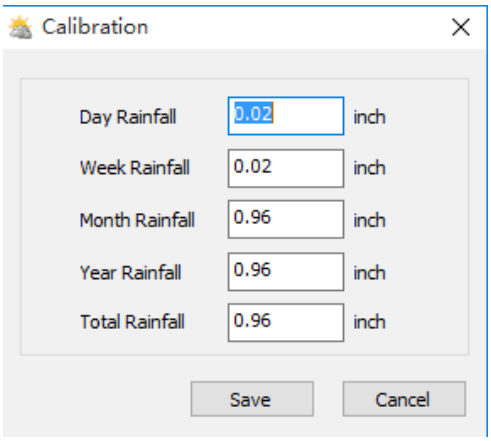

Record

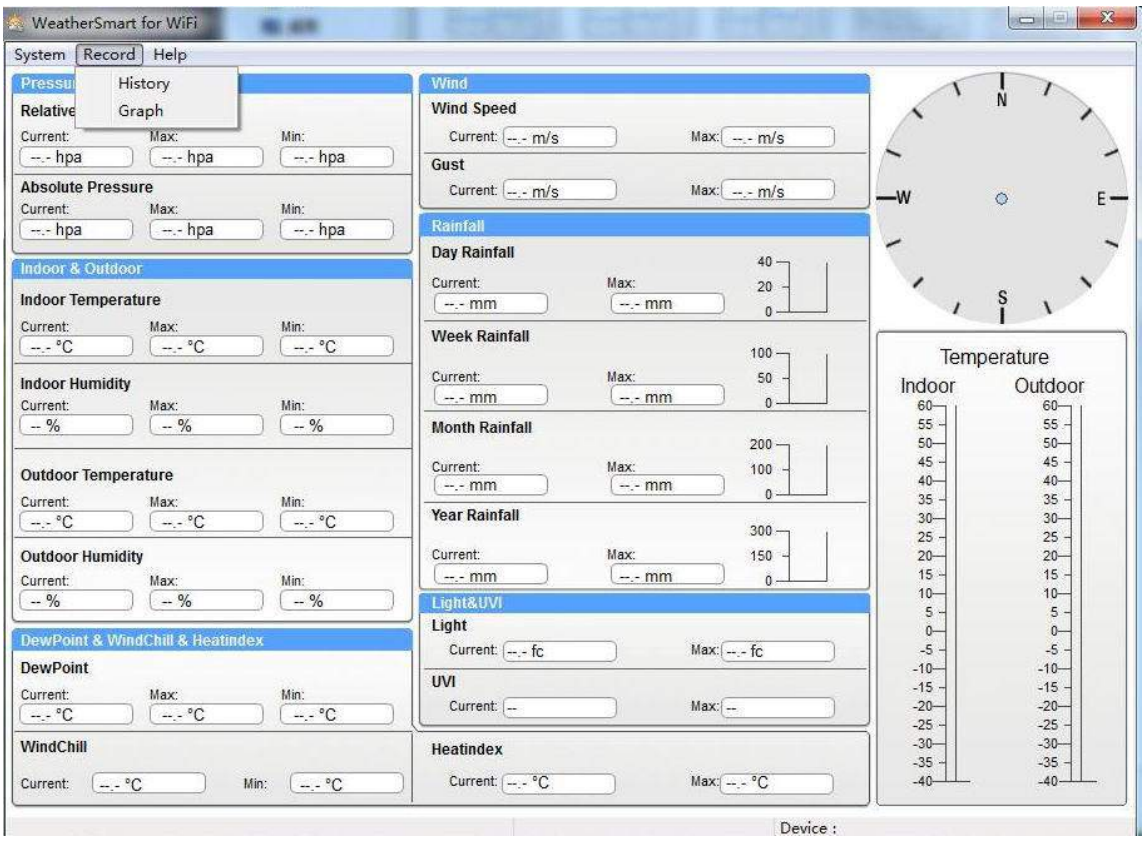

History

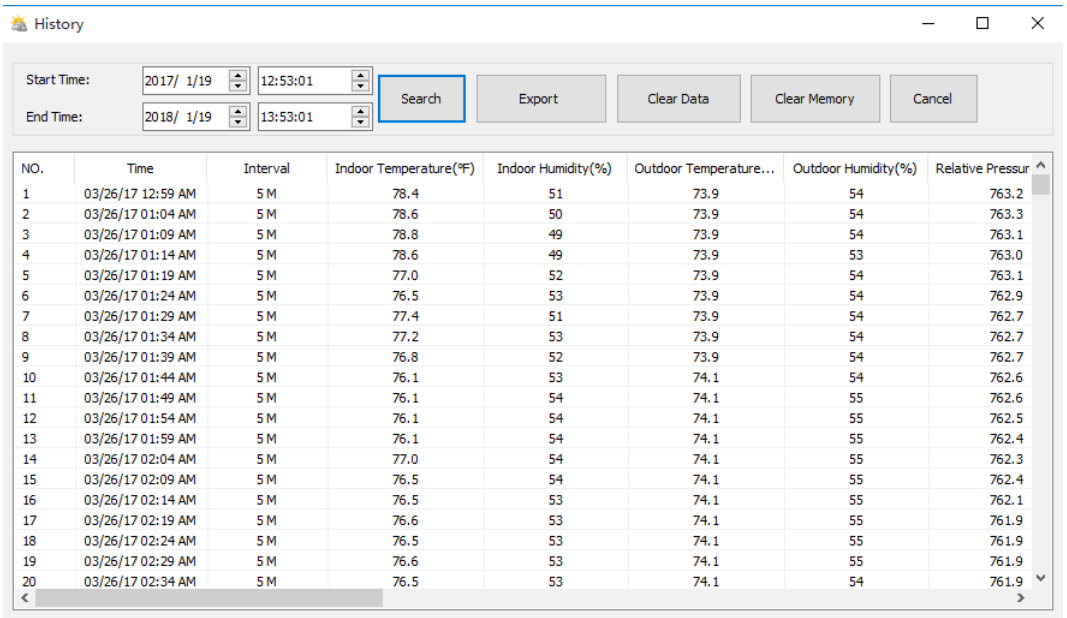

NO.	Time	Interval	Indoor Temperature(°F)	Indoor Humidity(%)	Outdoor Temperature...	Outdoor Humidity(%)	Relative Pressur
1	03/26/17 12:59 AM	5 M	78.4	51	73.9	54	763.2
2	03/26/17 01:04 AM	5 M	78.6	50	73.9	54	763.3
3	03/26/17 01:09 AM	5 M	78.8	49	73.9	54	763.1
4	03/26/17 01:14 AM	5 M	78.6	49	73.9	53	763.0
5	03/26/17 01:19 AM	5 M	77.0	52	73.9	54	763.1
6	03/26/17 01:24 AM	5 M	76.5	53	73.9	54	762.9
7	03/26/17 01:29 AM	5 M	77.4	51	73.9	54	762.7
8	03/26/17 01:34 AM	5 M	77.2	53	73.9	54	762.7
9	03/26/17 01:39 AM	5 M	76.8	52	73.9	54	762.7
10	03/26/17 01:44 AM	5 M	76.1	53	74.1	54	762.6
11	03/26/17 01:49 AM	5 M	76.1	54	74.1	55	762.6
12	03/26/17 01:54 AM	5 M	76.1	54	74.1	55	762.5
13	03/26/17 01:59 AM	5 M	76.1	54	74.1	55	762.4
14	03/26/17 02:04 AM	5 M	77.0	54	74.1	55	762.3
15	03/26/17 02:09 AM	5 M	76.5	54	74.1	55	762.4
16	03/26/17 02:14 AM	5 M	76.5	53	74.1	55	762.1
17	03/26/17 02:19 AM	5 M	76.6	53	74.1	55	761.9
18	03/26/17 02:24 AM	5 M	76.5	53	74.1	55	761.9
19	03/26/17 02:29 AM	5 M	76.6	53	74.1	55	761.9
20	03/26/17 02:34 AM	5 M	76.5	53	74.1	54	761.9

Graph

Maintenance

1. Clean the rain gauge once every 3 months. Rotate the funnel counter-clockwise and lift to expose the rain gauge mechanism, and clean with a damp cloth. Remove any dirt, debris and insects. If bug infestation is an issue, spray the array lightly with insecticide.

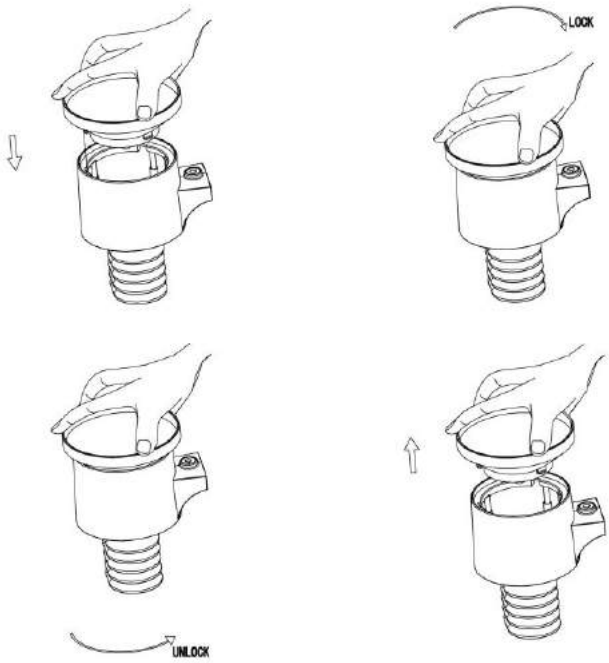

2. Clean the solar radiation sensor and solar panel every 3 months with damp cloth.
3. Replace batteries every 1-2 years. If left in too long, the batteries may leak due to environmental challenges. In harsh environments, inspect the batteries every 3 months (when cleaning the solar panel).
4. When replacing the batteries, apply a corrosion preventive compound on the battery terminals.

5. In snowy environments, spray the top of the weather station with anti-icing silicon spray to prevent snow build up.

Troubleshooting Guide

Problem	Solution
Wireless remote (outdoor unit) not reporting in to console. There are dashes (--) on the display console.	Check the thermo-hygrometer-transmitter LED for flashing. The outside sensor has an LED under the plastic, just above the battery compartment. The LED will flash every 48 seconds. If the LED is not flashing every 48 seconds, Replace the batteries in the outside thermo-hygrometer-transmitter. If the batteries were recently replaced, check the polarity. If the sensor is flashing every 48 seconds, proceed to the next step. There may be a temporary loss of communication due to reception loss related to interference or other location factors, or the batteries may have been changed in the remote and the console has not been reset. The solution may be as simple as **powering down and up the console**. 1. Make sure you have fresh batteries in the display console. 2. With the sensor array and console 10 feet away from each other, remove the batteries from the display console and wait 10 seconds. Put the batteries back in. 3. Do not touch any buttons for several minutes. 4. The remote sensor search icon  will splash on the display. Wait several minutes for this icon to turn off. 5. If the search icon turns off and the outdoor temperature and humidity are still showing dashes (--), the remote sensor is defective. If the sensor

Problem	Solution
	properly syncs up, proceed to the next step “How to prevent intermittent wireless communication” **How to prevent intermittent wireless communication issues:** 1. Install a fresh set of batteries in the remote sensor array and console. For cold weather environments, install lithium batteries. 2. The maximum line of sight communication range is 300’ but most users will get 100’ or less due to environmental conditions. Move the sensor and remote closer together. 3. If the sensor assembly is too close (less than 5’), move the sensor assembly away from the display console. 4. Make sure the remote sensors are not transmitting through solid metal like aluminum siding (acts as an RF shield), or earth barrier (down a hill). 5. Move the display console around electrical noise generating devices, such as computers, TVs and other wireless transmitters or receivers. 6. Move the remote sensor to a higher location. Move the remote sensor to a closer location.
Temperature sensor reads too high in the day time.	Make sure the thermo-hygrometer is mounted in a shaded area on the north facing wall.
Indoor and Outdoor Temperature do not agree	1. Allow up to one hour for the sensors to stabilize due to signal filtering. The indoor and outdoor temperature sensors should agree within 4 °F (the sensor accuracy is ± 2 °F). 2. Perform a temperature calibration (reference Section 2.1)
Indoor and Outdoor Humidity do not agree	1. Allow up to one hour for the sensors to stabilize due to signal filtering. The indoor and outdoor humidity sensors should agree within 10 % (the sensor accuracy is ± 5 %) 2. Perform a humidity calibration (reference Section 2.1)
Relative pressure does not agree with official reporting station	1. You may be viewing the relative pressure, not the absolute pressure.

Problem	Solution
	2. Make sure you properly calibrate the barometer to an official local weather station (reference Section 2.1) 3. The barometer is only accurate to ± 0.08 inHg within the following relative pressure range: 27.13 to 32.50 inHg, which corresponds to an altitude of -2,200 to 2,700 feet. At higher altitudes, expect some non-linearity or error.
Time is incorrect	Make sure your time zone and daylight savings time setting is correct.
The forecast icon is not accurate	The weather station console must run for several days to trend barometric pressure. The weather forecast is an estimation or generalization of weather changes in the next 24 to 48 hours, and varies from location to location. The tendency is simply a tool for projecting weather conditions and is never to be relied upon as an accurate method to predict the weather.
Moon phase is not correct	Check your calendar date and make sure it is correct
Display console contrast is weak	Replace console batteries with a fresh set of batteries.
Data not reporting to Wunderground.com	1. Confirm your password or key is correct. It is the password you registered on Wunderground.com. Your Wunderground.com password cannot begin with a non-alphanumeric character (a limitation of Wundeground.com, not the station). Example, $oewkrf is not a valid password, but oewkrf$ is valid. 2. Confirm your station ID is correct. The station ID is all caps, and the most common issue is substituting an O for a 0 (or visa versa). Example, KAZPHOEN11, not KAZPH0EN11 3. Make sure the date and time is correct on the console. If incorrect, you may be reporting old data, not real time data. 4. Make sure your time zone is set properly. If incorrect, you may be reporting old data, not

Problem	Solution
	real time data. 5. Check your router firewall settings. The console sends data via Port 80.
No WiFi connection	1. Check for WiFi symbol on the display. If wireless connectivity is successful the WiFi icon will be displayed in the time field. 2. Make sure your modem WiFi settings are correct (network name, and password). 3. Make sure the console is plugged into AC power. The console will not connect to WiFi when powered by batteries only. 4. The console only supports and connects to 2.4 GHz routers. If you own a 5 GHz router, and it is a dual band router, you will need to disable the 5 GHz band, and enable the 2.4 GHz band. 5. The console does not support guest networks.

Battery regulation / imprint

Notes on the return of batteries according to §12 BatterieVO: Batteries do not belong in the household waste. Please dispose of all batteries as required by law, disposal in domestic waste is expressly prohibited. Batteries and rechargeable batteries can be dispensed free of charge at municipal collection points or in the shops on the spot.

www.froggit.de

HS Group GmbH & Co. KG
Escherstr.31
50733 Koeln
Germany

Telefon 0221 / 367 48 05

E-Mail info@hs-group.de
Registergericht Amtsgericht Koeln HRA 26493
Komplementaer: HS Group Verwaltungsgesellschaft mbH
Sitz Koeln
Registergericht Amtsgericht Koeln HRB 64734
Geschaeftsfuehrer: Peter Haefele, Carl Schulte
UStId DE237971721
WEEE Reg. Nr. 66110125

Declaration of conformity

Hereby we declare, HS-Group GmbH & Co.KG, Escherstr. 31, 50733 D-Cologne, that this product is in compliance with the essential requirements and other relevant provisions of Directive 1999/5 / EC.
The declaration of conformity for this product can be found at: www.froggit.de or on request.